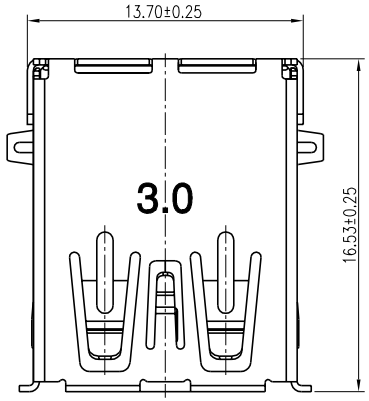

NOTE:
MATERIAL:
HOUSING:PBT+30% G.F. UL 94V-0
CONTACT 5P:BRASS
CONTACT 4P:PHOSPHOR BRONZE
SHELL:BRASS
PLATING:
CONTACT: GOLD FLASH AND TIN OVER NICKEL PLATED
SHELL: NICKEL PLATED OVER ALL
SPECIFICATION:
CURRENT RATING:1.8A FOR VBUS AND GND CONTACTS
1.5A FOR OTHER CONTACTS
WITHSTANDING VOLTAGE:100V AC(RMS)
INSULATION RESISTANCT:100MΩ MIN AT 100V DC
CONTACT RESISTANCE:30mΩ MAX FOR VBUS AND GND CONTACTS
50mΩ MAX FOR OTHER CONTACTS
MATING FORCE:3.57KgF MAX
UNMATING FORCE:1.02KgF MIN
PART NO:
12 4-09 2 1 N X XX 02

HOUSING COLOR:
05=AZURY 19=MAZARINE
PLATING GOLD:
A=1u" B=3u"
C=5u" D=10u"
E=15u" F=30u"

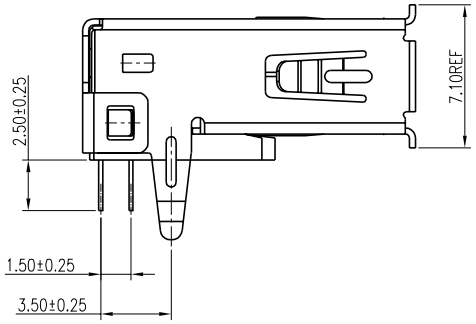

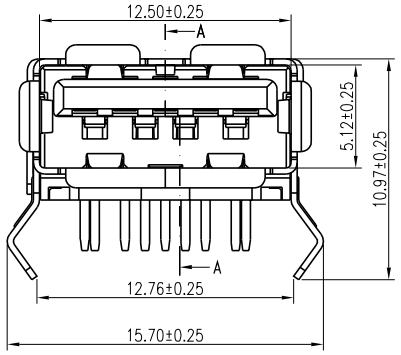

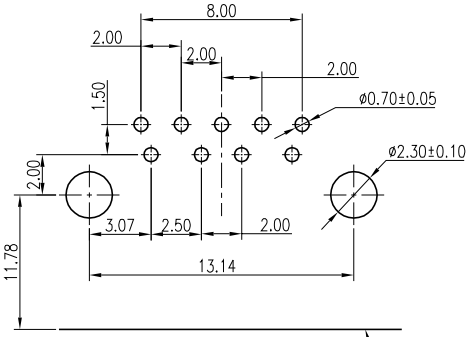

RECOMMENDED PCB LAYOUT

CONNECTOR FRONT EDGE

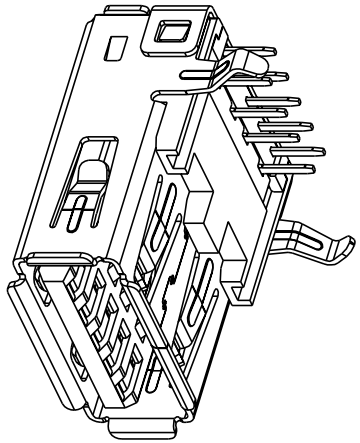

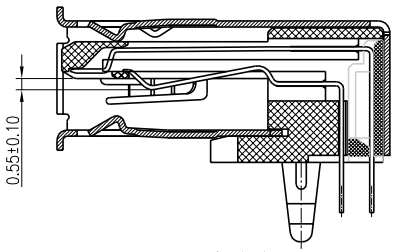

SECTION A-A

DATE	DR.BY	ECN.NO.	DESCRIPTION	MARK	VER.
10/02/10	ANG		NEW DRAWING		1

-TOLERANCES-
UNLESS OTHERWISE SPECIFIED
公差參考表

X.X	±0.30	X.X°	±3.00°
X.XX	±0.20	X.XX°	±1.00°
X.XXX	±0.10	X.XXX°	±0.500°

APPD: 核准：
CHECK: 校對：
DRAW: 繪圖：

TITLE: USB 3.0 FEMAL DIP 90°
產品名稱： 成品(A TYPE)

PRODUCT NO: 產品編號： 124-0921XXXX02

DATE	SCALE	UNIT	TYPE	PAGE
2010.02.10	1:1	mm	CD	1/1